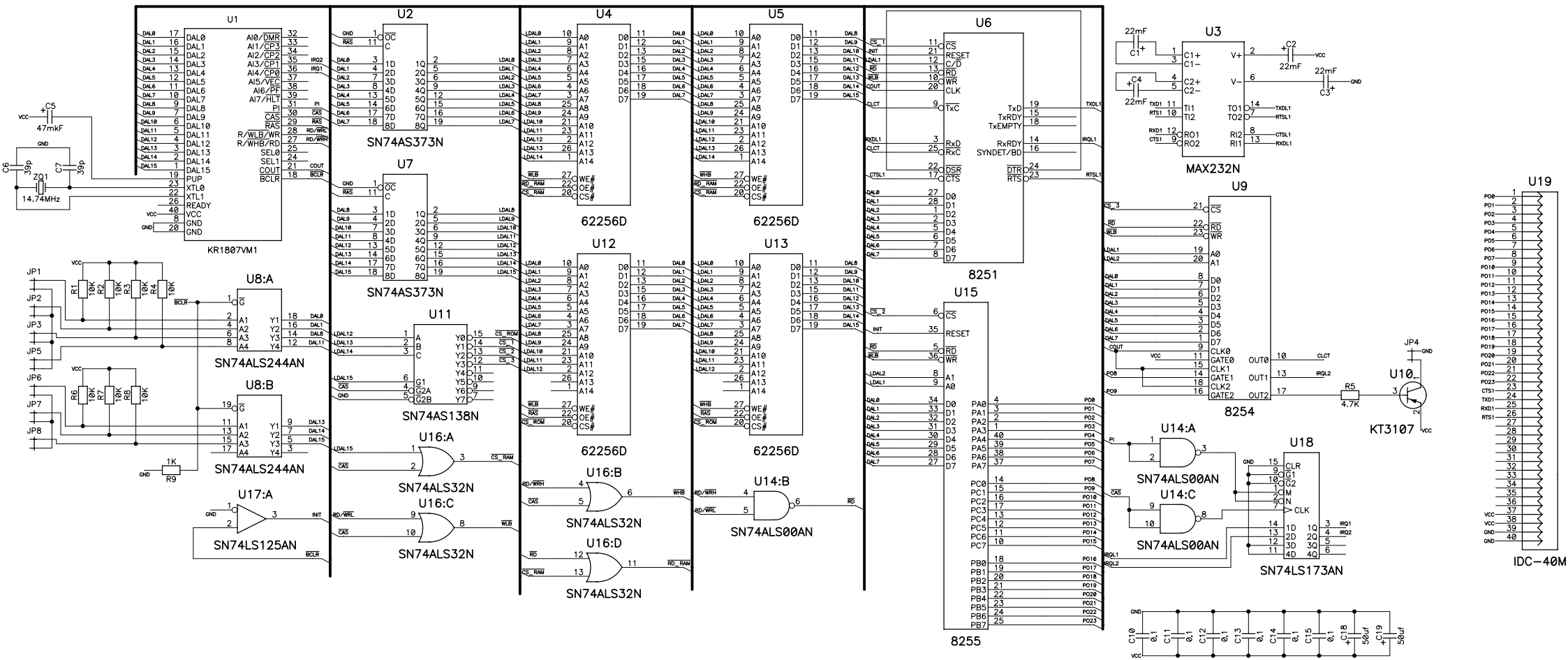
U1
KR1807VM1
U2
SN74AS373N
U7
SN74AS373N
U4
62256D
U5
62256D
U12
62256D
U13
62256D
U6
8251
U15
8255
U3
MAX232N
U9
8254
U19
IDC-40M
U8:A
SN74ALS244AN
U8:B
SN74ALS244AN
U11
SN74AS138N
U16:A
SN74ALS32N
U16:C
SN74ALS32N
U16:B
SN74ALS32N
U16:D
SN74ALS32N
U17:A
SN74LS125AN
U14:B
SN74ALS00AN
U14:A
SN74ALS00AN
U14:C
SN74ALS00AN
U18
SN74LS173AN
U10
KT3107
ZQ1
14.74MHz
C5
47mkF
C6
39p
C7
39p
C1
22mF
C2
22mF
C3
22mF
C4
22mF
R1
10K
R2
10K
R3
10K
R4
10K
R6
10K
R7
10K
R8
10K
R9
1K
R5
4.7K
JP1
JP2
JP3
JP5
JP6
JP7
JP8
JP4
C10
0,1
C11
0,1
C12
0,1
C13
0,1
C14
0,1
C15
0,1
C18
50uf
C19
50uf